Installation of Pro series concrete Catch Basin into an asphalt concrete pavement

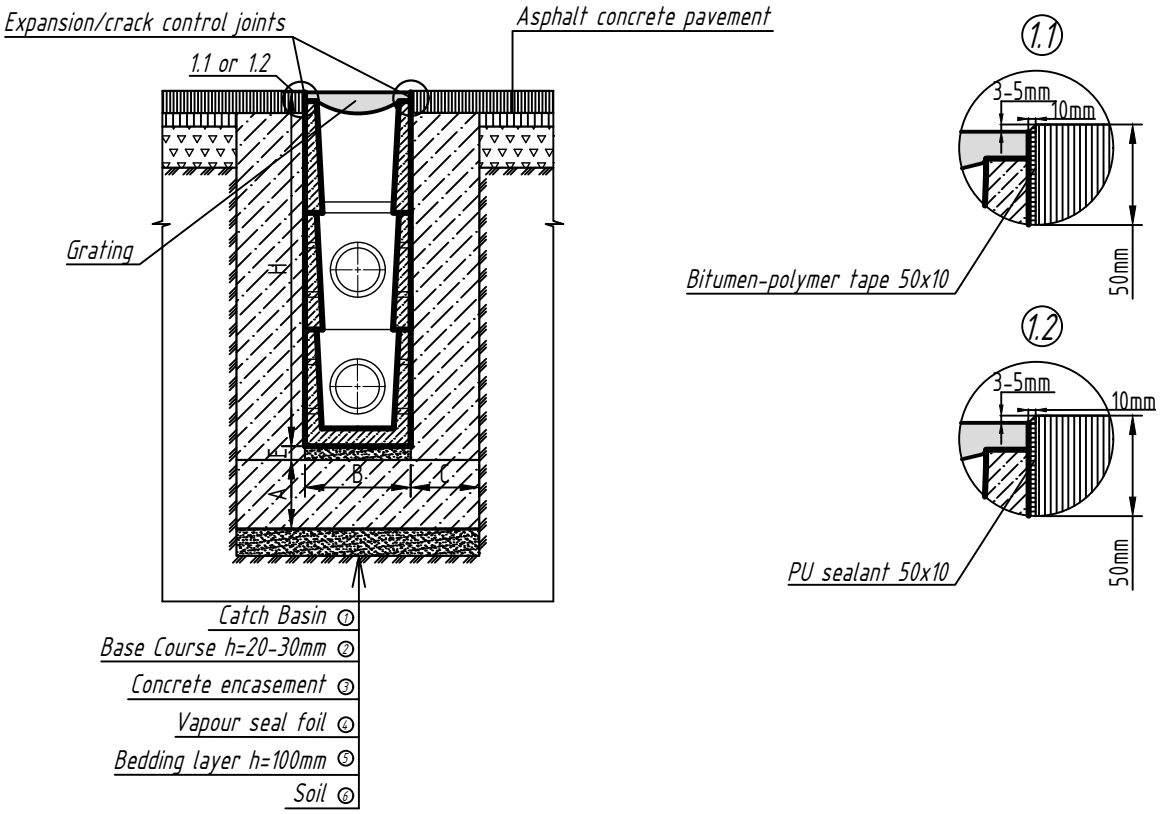

Recommended parameters of the Concrete encasement

Parameter	Load class	
	D400	E600
Concrete encasement depth (A), mm	200	250
Concrete encasement width (C), mm	200	200
Compressive strength concrete class	C25/30	C25/30

Notes

1. Parameters of bedding layer, concrete encasements as well as necessity of reinforcement must be selected according to geological conditions of the site.

2. Applicability of the concrete reinforcement must be approved by E class calculation (rebar type and class).

3. Installation diagram is non-regulatory. Check updates on the Vodaland website.

						Pro Asphalt	BM7-201119	
						Typical installation scheme of the rain water collection system		
Designed					20.11.19	Concrete Catch Basin Pro series	7	
						Asphalt pavement Catch Basin installation	VODALAND	