Installation of Base series plastic Catch Basin into an asphalt concrete pavement

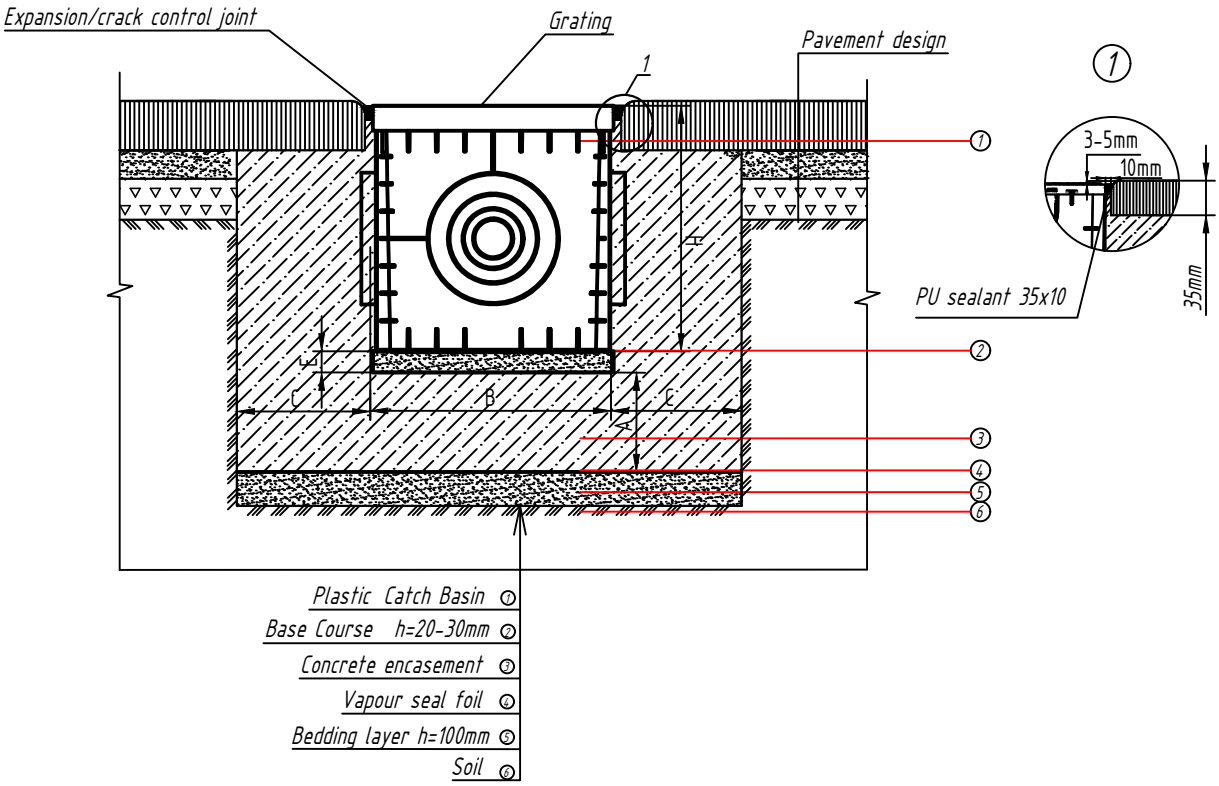

Recommended parameters of the Concrete encasement

Parameter	Load class		
	A 15	B 125	C250
Concrete encasement depth (A), mm	80	100	150
Concrete encasement width (C), mm	80	100	150
Compressive strength concrete class	C15/20	C20/25	C20/25

Notes

1. Parameters of bedding layer, concrete encasements as well as necessity of reinforcement must be selected according to geological conditions of the site.

2. Installation diagram is non-regulatory. Check updates on the Vodaland website.

Designed			07.01.20	Plastic Catch Basin	
Checked					
Approved by				Installation into an asphalt concrete pavement	VODALAND

Base - Asphalt

Typical installation scheme of the rain water collection system