Project history					
N	Date	Revision	Design	Check	Approved
1	2025/9/1	1	Leo Li	Thomas Qin	Thomas Qin

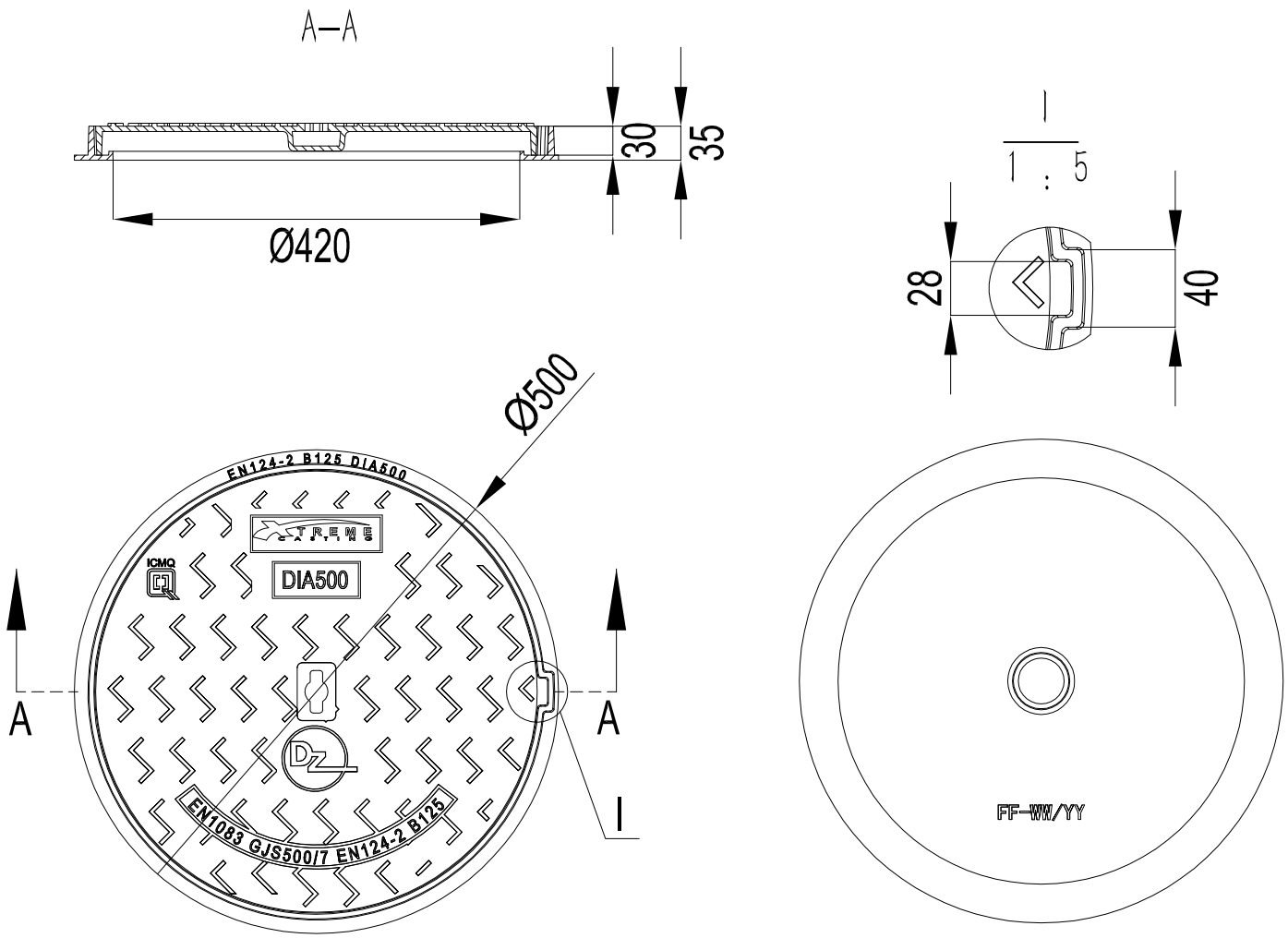

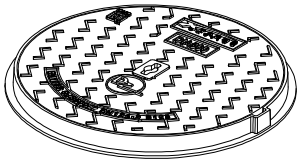

BABEL	CHANGZHOU BABEL INDUSTRIAL CO.,LTD	WEIGHT [KGS]	COVER	FRAME	TOTAL
					13

Surface Coating:Bitumen Paint

ID Production

DZ B125 DIA500

Class:B125

Tolerance: UNI EN 8062-CT10, Weight ¡À3%

POS.	N	Description	MATERIAL STANDARD	Material
4				
3				
2	1	Cover		EN GJS 500-7
1	1	Frame		EN GJS 500-7

Copyright:
This drawing has been released on condition that it will not be copied, reprinted or divulged to a third person without our prior agreement by the society.