Utilizare primara

Nr. de referinta

Semnatura si data

Copy inv. No

Repl. Inv. No

Semnatura si data

Semnatura si data

Orig. Inv. No

A-A

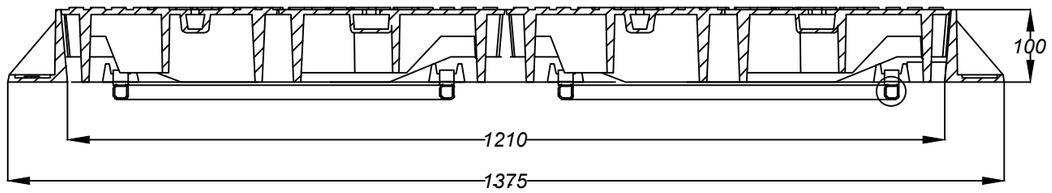

B-B

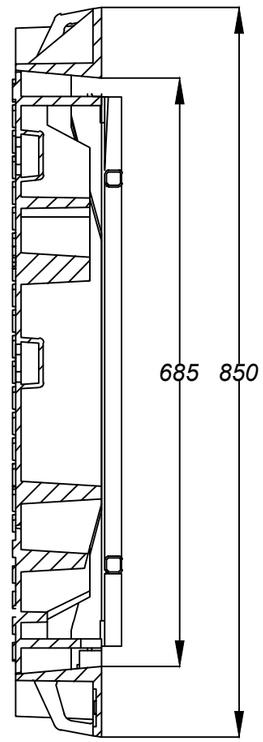

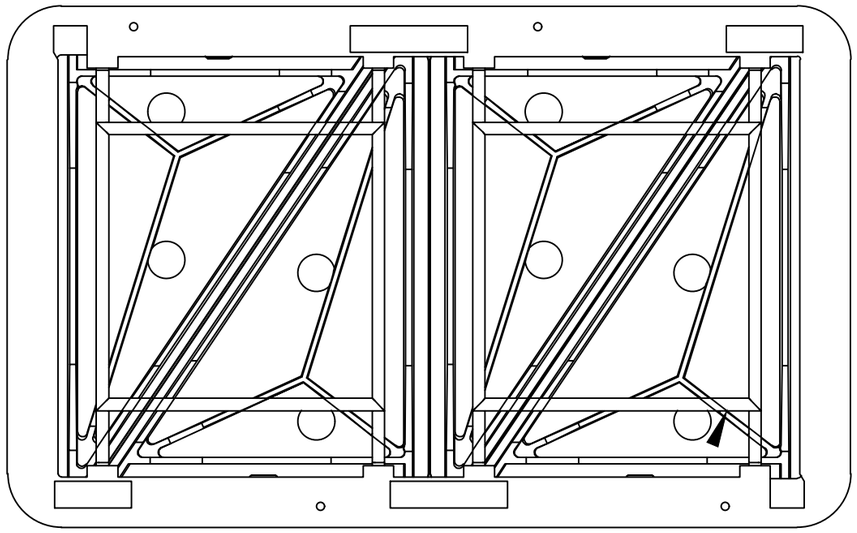

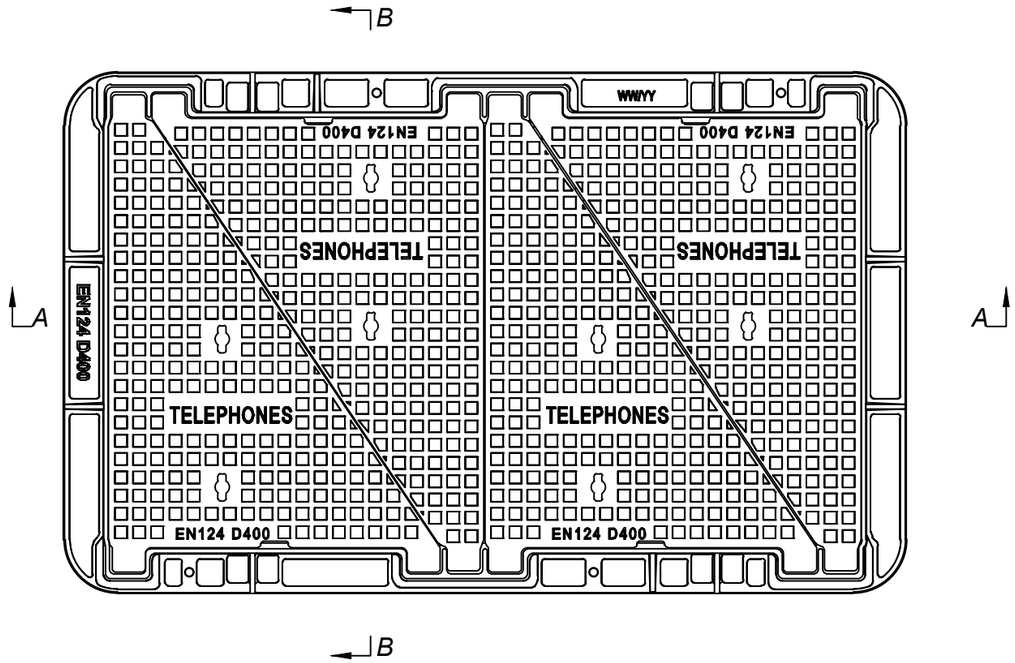

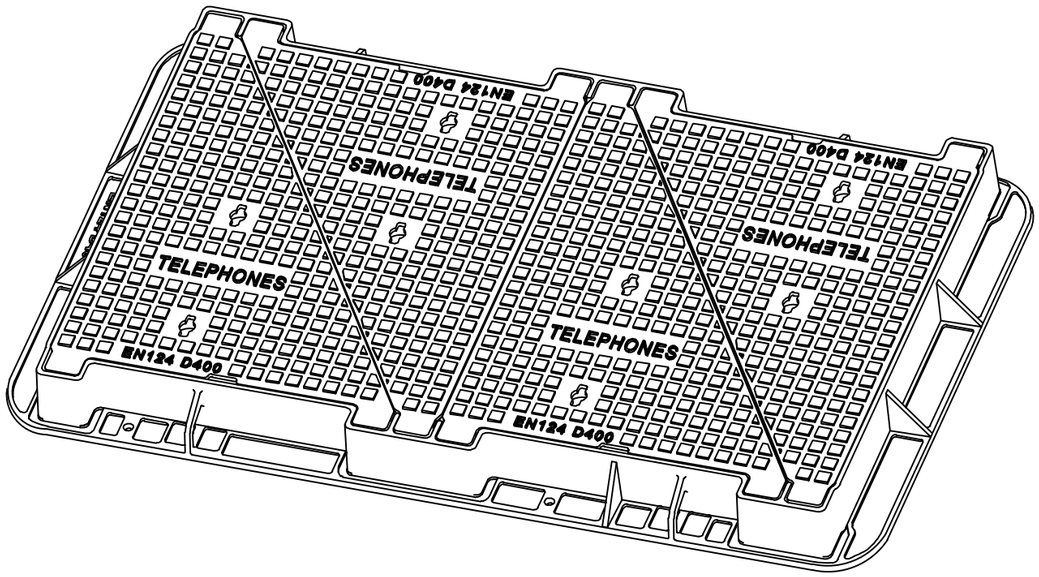

		Name	Signature	Date
DRAWN		Leo Li		21.02.2021
CHK'D		Thomas Qin		
APPV'D		Tsyurak		
Modif.		Larisa Chitu		

Art. JRC12D400

Cover Cast Iron URBAN

Load class: D400

Let.	Weight.[Kg]	Scale
	208.5	1:5

Sheet 1 | Sheets 1

Material

Cast Iron

VODALAND